Smart display switch

LZPS-1 / LZPS-2 / LZPS-3 / LZPS-4 | ZigBee

ISOLATE BEFORE OPENING OR WIRING

Installation and electrical testing by a qualified electrical installer. Isolate the circuit, secure against reconnection and prove dead. A wall button or NETUS APP OFF command is not safe isolation.

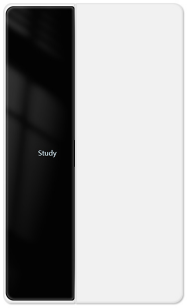

LZPS-1
1 gang



LZPS-2
2 gang



LZPS-3
3 gang



LZPS-4
4 gang

01 / IDENTIFICATION & RATINGS

Power supply	100-240 V AC
Load rating	Up to 600 W per gang
Communication	ZigBee; NETUS gateway for NETUS APP functions
Mounting	Horizontal or vertical; secure with two suitable screws

02 / FIT & SECURE

01 Check the supplied unit and installation point

Confirm the model, rating and fitted terminal markings. Check wall-box space, fixing centres and cable clearance against the actual unit before installation.

02 Connect and secure the mounting assembly

With power isolated, follow the functional connections on page 2. Use the release points on the supplied housing if the faceplate must be removed. Secure with two suitable screws; avoid distortion and trapped cables.

03 Refit and complete electrical checks

Refit the faceplate fully before energising. Confirm terminal torque, conductor size and strip length from the supplied unit instructions. Complete the checks on page 2 before app setup.

Connect the circuit

FUNCTIONAL CONNECTIONS / 4 GANG SHOWN

For units marked L, N and L1-L4 as fitted. This diagram shows circuit connections, not terminal positions. Check the actual ZigBee unit; if its markings differ, obtain its correct wiring diagram before proceeding.

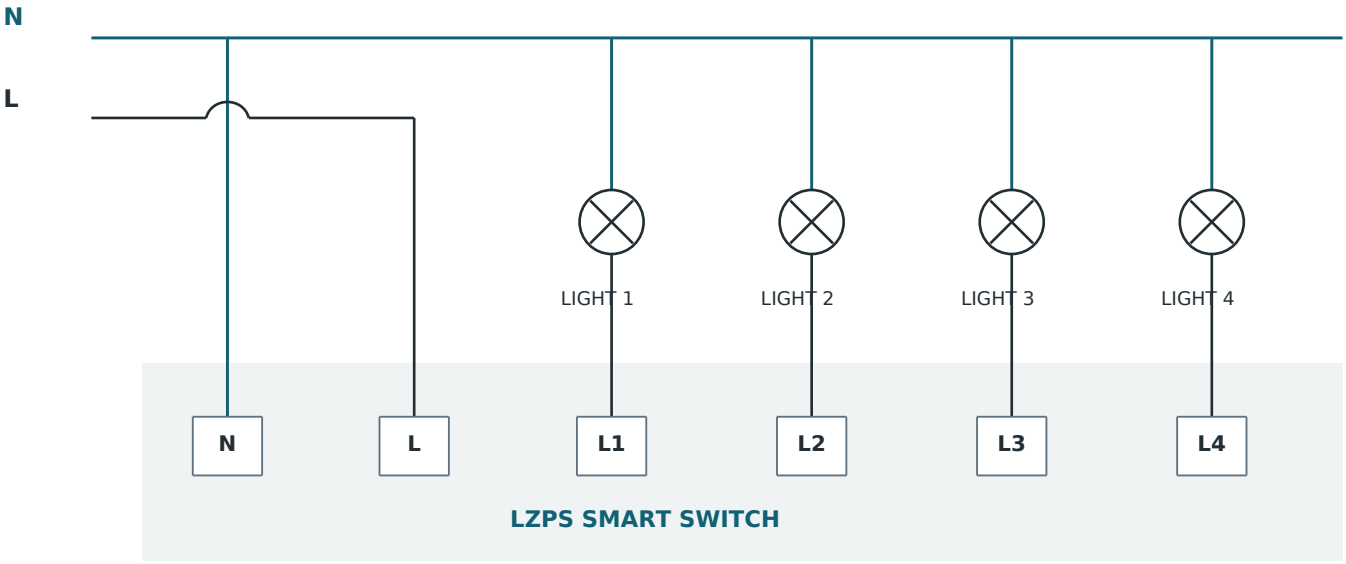

Protective earth (PE): maintain continuity to the circuit and fittings. Connect to an earth terminal only where marked on the actual unit. No PE terminal is assumed in this schematic.

TERMINAL SCHEDULE

L	Incoming circuit supply L
N	Circuit N; lamp N connections return to the same circuit N
L1 / L2 / L3 / L4	Switched outputs to lights 1 / 2 / 3 / 4 respectively

LZPS-1: L1. **LZPS-2:** L1-L2. **LZPS-3:** L1-L3. **LZPS-4:** L1-L4.
Use only the outputs fitted to the unit. Leave unused outputs unconnected. Do not join outputs or connect PE to N at the switch.

BEFORE ENERGISING

Check termination security, polarity, protective-earth continuity and insulation as applicable, using tests suitable for connected electronics. Verify circuit protection, connected-load suitability and full enclosure. Complete required installation tests before energising.

After energising, test every button locally and confirm that only the intended light responds. If a channel fails, isolate the circuit before investigating.

NETUS APP setup

ZigBee PAIRING / SCREEN LABELS / HANDOVER

04 Prepare NETUS APP and the gateway

Sign in to NETUS APP and select the correct Home. Add the compatible NETUS gateway first and confirm it is online. Keep the switch within gateway range during pairing.

05 Put the ZigBee switch into pairing mode

After electrical verification, power the switch. Press and hold the designated pairing button for 5 seconds to enter ZigBee pairing mode. Confirm the pairing indication before starting discovery.

PAIRING: HOLD FOR 5 SECONDS
Once pairing mode is active, add the switch through the NETUS gateway.

06 Discover and add through NETUS gateway

Open the NETUS gateway device page and select Add subdevice or Add device. Start discovery, select the switch when it appears and complete the prompts. Assign its room and device name.

07 Name each button on the display

Open the switch control page and use the edit or rename control beside each channel, where available. Enter a short name such as Entry, Kitchen or Bedroom, then save. Wake the display by approaching and confirm each label matches the connected light.

08 Check every channel and automation

Test LZPS-1 through LZPS-4 as applicable: each button, each NETUS APP channel and state feedback. Test configured timers, groups and voice control. Confirm all labels display correctly.

QUICK TROUBLESHOOTING

Not discovered	Check gateway online status, pairing mode and range; restart discovery using the confirmed ZigBee pairing procedure.
Label does not update	Check the channel edit control, save the name and allow synchronisation. Reopen the device page and wake the display.
Light does not respond	Test local and app control. For electrical checks, isolate the circuit before the installer checks connections and load.

Handover: demonstrate local control, NETUS APP access, display labels and configured routines.
Installer / date: _____ All channels checked: _____